Horndean & District Amateur Radio Club Journal

Volume 5 **Number 7**

April-May 2021

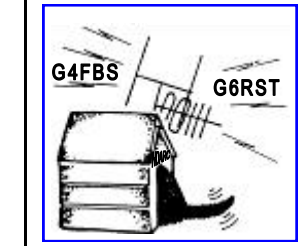

This is my shack, show me yours.
Send pictures to landscape@sky.com

Horndean & District Amateur Radio Club
Founded in 1975

Club President

Lt Cdr Doug Hotchkiss MBE QCB RN (ret'd) G4BEQ

Club Officers

Chairman **Ken Lindsay GØJWL MA**
Tel 02392 170548 e-mail: chairman@hdarc.co.uk

Secretary **Stuart Swain GØFYX**
Tel 02392 472846 e-mail: secretary@hdarc.co.uk

Treasurer **Bill Kenway 2EØWGK**
Tel 07976276304 e-mail: treasurer@hdarc.co.uk

Committee Members

Membership Secretary Tel: 07976276304	Bill Kenway 2EØWGK e-mail: treasurer@hdarc.co.uk
Social Secretary & Exam Secretary Tel: 02392 785568	Julia Tribe GØIUY e-mail: juliatribe@ntlworld.com
Training Manager	Ken Lindsay GØJWL e-mail: chairman@hdarc.co.uk
Training Associate (ex officio) Tel: 02392 785568	Simon Tribe GØIEY E-mail: simontribe@ntlworld.com
Station Manager Tel: 07724048212	Chris Jacobs MØKTT e-mail: oldbikenut1@gmail.com
Editor (ex-officio)	Ralph Heslop 2EØHES e-mail: landscape@sky.com
Printer (ex-officio) Tel: 02392 256768	Peter Tagg G8PIQ e-mail: g8piq@btinternet.com
Awards Manager	Please contact Stuart GØFYX with any award applications or enquiries
Webmaster (ex-officio)	Neil Stone 2EØLNX e-mail: neil.stone@gmail.com
Committee member	Jon Dunster MØXUE e-mail: jond@protonmail.ch
Committee member	Alan Waller 2EØFEZ e-mail: alanwaller82@gmail.com

CONTENTS

Articles, letters of interest, photographs are always needed and should be sent to the Editor :- landscape@sky.com

I use Microsoft Publisher to produce the journal so am happy to accept articles/photographs via email. A Word document or Picture attachment. Just use Journal article or Journal picture as the subject matter.

Opinions expressed in the journal are not necessarily those of the HDARC. The editor has the right to reproduce the articles for our affiliated club journals/newsletters. The Editor decision is always final.

Closing date for next journal is : June 6th

Editorial

Hi to all

As you read this I will have been out mobile for the first time for over a year, hoping to report large amounts of new FT8 contacts in new countries (well we can all dream). Seriously, it's good that we are on the way out of the lockdown, but still over 2 months until the hall reopens, so remember the Zoom meetings on Tuesdays, and various nets during the week.

73

Ralph 2E0HES

Club Clothing

Sweatshirts **Polo-Shirts** **T-Shirts** **Fleeces**

Sizes: Small = 36 - 38"- Medium = 38 - 40"- Large = 40 - 42"- XL = 42 - 44"

Available with club logo only or logo, name & callsign

Cap - One Size only: with adjustable strap - Stitching in Yellow

Available with callsign only or callsign and/or name

Some items available in various colours, see **Stuart G0FYX** for details

All articles appreciated

Any articles you think you have that will entertain your co- members then please send them in to Ralph at landscape@sky.com

Nuggets from the net

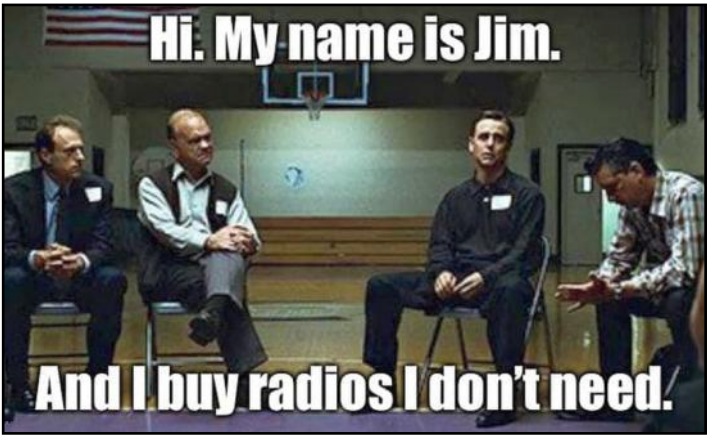

Mixing Business & Pleasure With...

'Andy The Light'

'Andy The Light' Bluer G3UUZ at his kitchen window sill operating position - Bishop Rock Lighthouse.

The 1998 'Lighthouse and Lightship Activity Weekend' saw G3UUZ 'Andy The Light' Bluer operating as a Radio Amateur once again from a lighthouse, and in this article he tells you how he found a happy medium between being a lighthouse keeper and a Radio Amateur.

In November 1965 I created a piece of history when, as GW3UUZ, I became the first UK amateur to have a lighthouse named on his licence as the main address. And it wasn't achieved without first cutting through a bundle of 'red tape' either! (See **Fig. 1**). The GPO, never a body to create precedents, witheld the granting of the licence until assurances from the Corporation of Trinity House were received to say that they had no objections to its issue. The help of **Ron Broadbent G3AJJ** is acknowledged here for it was he who, as a senior employee of Trinity House, spoke upon my behalf in the right quarters.

At the address in question, **Nash Point Lighthouse** (see **Fig. 2**) in South Wales, my first rig was a B2 spy set bought for thirty shillings (£1.50) with an extra capacitor wired across the 3.5MHz coil to give coverage of the 1.8MHz band.

The v.f.o. on my B2, which was twice the size of the transceiver, came from an ex-Ministry Of Defence (MOD) ET-4336 transmitter and consisted of an 807 valve in a tuned plate tuned grid configuration, using two large roller coaster coils. The receiver was an Eagle Star 550.

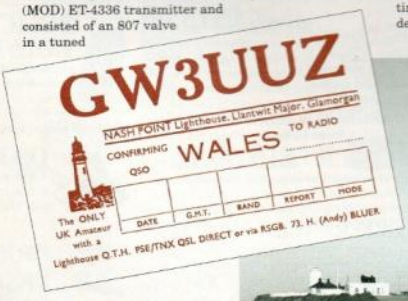

Fig. 1: 'Andy The Light' GW3UUZ's QSL card which he used whilst at Nash Point Lighthouse.

First Antenna

A 27m (88ft) sloping wire from the shack to the lighthouse gallery was my first antenna at the lighthouse and, initially, all operation was done on c.w. The lighthouse, situated on a 30m (100ft) high cliffs overlooking the Bristol Channel, afforded a clear take-off for r.f. over the 250° arc from NE through south to WNW!

The first shack at the lighthouse was a redundant toilet (see **Fig. 3 & 4**), but soon afterwards I requisitioned a granite outhouse and I constructed a 2 × 1m (8 × 4ft) bench (see Fig. 1). Apart from my operator's chair, there was also a comfortable easy chair and a bed-settee in the shack.

From the window over the bench, I removed one small pane. This was then replaced with a piece of clear plastic in order to allow for the easy drilling of holes to bring the feeder into the shack.

Outside, the soil depth was only 600mm (2ft) over solid rock and an area was dug out and a 900 x 600 × 100mm deep copper tray buried therein with a copper strap threaded under the window frame into the shack. This 'earth' was later connected to a counterpoise system of wire in three 'legs' of 152m each. (See **Fig. 5**).

This first antenna had now become a 40.5m vertical wire suspended from a cord stretched between the top of the tower to a pole some 61m away in the rising ground behind the shack. Although a number of different bits of equipment were acquired and disposed of during this time, it was decided that my next 'buy' would be a decent receiver.

Fig. 2: Nash Point Lighthouse. Andy's second shack is the small building on the far right.

Since writing this article, 'Andy The Light' Bluer has been awarded a **BEM** "For Meritorious Service". Congratulations, Andy, from all here at *PW*!

Fig. 3: Andy GW3UUZ's first shack at Nash Point Lighthouse was a converted toilet. In this photograph you can see Andy on the 'throne'.

Fig. 4: GW3UUZ's first station layout at Nash Point Lighthouse in the converted toilet. Note: the size and price of that Callbook!

Bargain Price

I bought a **Hammarlund HQ-180A** at a bargain price but it needed a complete overhaul and 'peaking' - a task carried out by a local professional engineer ... for free! How lucky can you get?

I acquired yet another transceiver - this time a **Heathkit DX-100** - which was also 'screwed up' to contest pitch! Very rarely was a DX station called that didn't reply - even rarer was an unanswered CQ call!

I extended my antenna by adding another 40m from the top of the vertical section horizontally, towards the pole in the field behind the shack. This had the effect of raising the 'take-off' point for r.f. well above ground.

The 1.8MHz band was my favourite and, getting paid for being active at hours when most UK amateurs were asleep enabled me to qualify for my WAC award (endorsed for 1.8MHz c.w.) quite quickly. In those days, of course, there was a 10W limit when working 1.8MHz.

So, where did my title - 'Andy The Light' - come from? Well, in Wales, tradesmen and artisans were often referred to by their professions. 'Jones The Milk', 'Evans The Bread' and so on. (There was even an undertaker who was known as 'Dai The Death'!).

My first name is Handel - I was named after the composer - and to begin with, whenever I used the microphone, difficulties were soon encountered. Continental operators would ask: "What's your handle"? - only to be told "the handle is Handel"!

A friend of mine then suggested that I use 'Andy' in future in order to avoid further confusion and, in any case, it seemed easier to hand when using the key. Later, a Reverend gentleman - a 'regular' on a 3.5MHz net proposed that I be referred to as 'Andy The Light', in keeping with the above mentioned Welsh custom ... and it stuck!

Only Amateur Active

For quite some time - apart from **Bill Hooper ZB2U** - I was the only Radio Amateur active from a lighthouse. I often wondered just when I would make contact with another.

Well, my chance came on the 19th February 1966 when I called **GM3TMK/A** (who wasn't actually a lightkeeper) who had been given permission to hang an antenna from the tower for a limited period at **Tarbat Ness Lighthouse**, Rosshire.

My next 'Lighthouse to Lighthouse' contact was with **GM3VBB/A** - an electrician with the Northern Lighthouse Board, This contact was made when he was working at **Duncansby Head Lighthouse**, John O'Groats on the 26th November 1968.

Friends from the **Port Talbot ARC** often used the facilities at Nash Point Lighthouse for contest working, especially the RSGB 7MHz contest. For this the big antenna was replaced with a 40m dipole at 40m high running north/south fed with 80Ω flat twin.

A terminated Beverage antenna of 402m length, running due west at 3m high, was used for receiving. As you can imagine, with a group of operators covering the 24 hour contest period, the easy chair and the bed-settee I mentioned earlier were very much appreciated.

Each time the Port Talbot ARC entered, they were always a good hour ahead of their main German rivals into the USA which allowed them to amass quite a few points

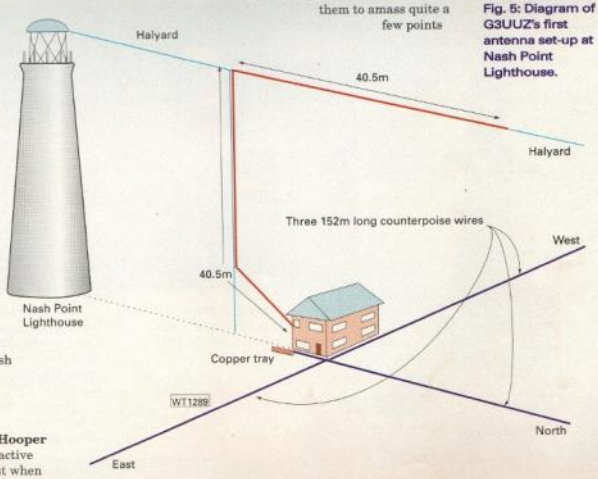

Fig. 5: Diagram of G3UUZ's first antenna set-up at Nash Point Lighthouse.

Fig. 6: Skerries Lighthouse. Andy G3UUZ's antenna set-up at this lighthouse stretched across the lagoon. You may just about see the antenna in the foreground of the photograph.

before they too got among the 'Ws'.

Lighthouse keepers don't remain at any one station for very long and so it was with me. A transfer to North Wales allowed operation to take place from the **'Skerries'** - a group of rocky islets north west of Angelsey. Here the antenna was another 80m length of wire, but this time it was slung horizontally from the top of the tower across a lagoon to another islet to the west. (See **Fig. 6**).

It was from the Skerries (it is believed) that the first contact via Amateur Radio between serving keepers on lighthouses took place when, on the 9th October 1972, when I worked **Stewart GM3UA/A** serving at St. Abbs Head Lighthouse, Berwick.

Stewart had joined the Scottish Lights Service earlier that year and had been persuaded to take his gear with him as he travelled to different stations during his training period. This resulted in contacts with **Skerryvore**, **Bell Rock**, **Sumburgh Head** (Shetland), **Cape Wrath**, **Holy Island** and **Pladda**.

Brief Stays

Following a brief stay at **Anvil Point Lighthouse**, near Swanage, I was then transferred (in 1973) to the famous **Bishop Rock Lighthouse** - a 56m tall tower, 11km west of the Isles of Scilly.

During this posting, Stewart and I achieved what we believe may be the longest (r.f. distance) contact in the UK when we had an 3.5MHz QSO between Bishop Rock (49°52min North 06°26min West) and **Muckle Flugga** (60°51min North 00°53min West) the most south westerly and northern rocks in the British Isles! Sadly, a feat that will almost certainly never be repeated.

By this time, the DX 100/HQ180a combination had long since been disposed of in favour of a more compact outfit. The first rig used at the Bishop was a **Heathkit 3.5MHz** s.s.b. only transceiver placed on the inner window sill in the kitchen about two-thirds of the way up from the base of the tower.

A vertical dipole was hung from gallery around the lantern which, fortunately, brought the feed point opposite the window. Only four metres of coaxial was needed to connect the rig to the antenna.

With 20W out, a CQ call resulted in a mini pile-up with many PY stations replying. This sounded promising but - as the bottom leg of the dipole wouldn't survive the winter waves - a complete rethink was required. I settled for a 27m vertical with its base at 24m above sea level (a.s.l.).

The lighthouse authority, Trinity House, had decreed that no antenna should extend above the roof of the tower. In 1976 an all-steel helicopter landing pad was constructed above the lantern and around the periphery of the 'pad' was a two metre wide nylon safety net.

Moving the rig - now an **FT-201** - into the room below the kitchen meant that I could now get the vertical to 30m in length into the nylon netting where it was threaded round, forming a loop of 20m. A 7MHz 'Halo' at the top of a 30m vertical! Earthing was achieved by running a counterpoise for each band under the lino in the shack. As far as I know it is still out there! (See **Fig. 7**).

During mid-1977, when UK amateurs could use a GE prefix to celebrate the silver jubilee of the accession to the Throne of Queen Elizabeth II ... I switched on the rig at 0100 one morning on 14MHz and was still 'at it' at 0500 working Ws from New York to New Mexico and from Florida to Fairbanks (Alaska) at the rate of two a minute!

Ashore Again

I came ashore again in 1981 with a posting to **Pendeen Light** (see **Fig. 8**) about half way between Lands End and St. Ives on the north Cornish coast. The antenna here at Pendeen Light was 60m long at 10m high and, although it worked well, I really missed the big verticals.

I miss them even more now for, since retiring around six years ago, I have moved into a bungalow with a garden only four metres by four metres. It was then that the real challenges came!

My present antenna is an end-fed 'invisible' wire, three metres across and three metres down again - like a goal mouth - but it seems to work around the UK on 7MHz and further afield (California) on 21MHz with an Alinco DX-70TH transceiver and counterpoises for each band.

Plans are afoot to try a tall multi-band vertical antenna as soon as I can persuade the local authority of its necessity!

PW

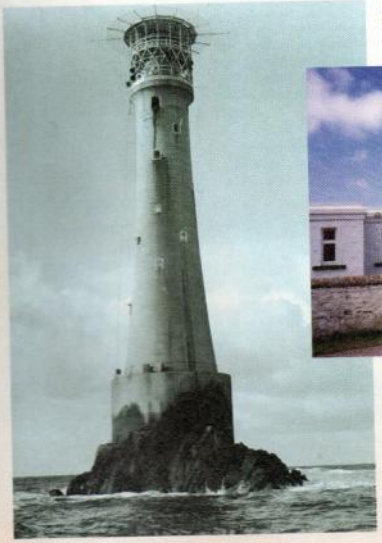

Fig. 7: Bishop Rock Lighthouse. The 'early' antenna can just be seen in the right upper half of the picture.

Fig. 8: Pendeen Lighthouse - the last 'posting' - 1981-1993.

Frequency CAAlibration For Old Rigs

Playtime

Recently I've been playing with the FT8 data mode which uses a very narrow bandwidth (50Hz) transmission. The short 13 character messages are converted to binary 1s and 0s, with loads of error correction and sent slowly over 15 seconds as a warbling sound using 2 tones. Very clever PC software allows very distant stations to be worked even in poor conditions. Modern rigs have a USB socket which can be plugged into the PC and the FT8 software (WSJT-X) then controls and communicates with the rig automatically. Add an auto ATU and all the operator has to do is click on a band and click on CQs marked as not in the log. If they'd have automated that bit, you could have gone to bed while it got on and worked all the stations on the planet. The tech is amazing but for me it's not very interesting to use. Most interesting for me is the PSK reporter software which shows where your signal is being received.

An interesting life

Personally I like to feel involved in the QSO process, so I got to thinking if it could be made more hands on. The solution was to use a rig from a time before microprocessors, one that didn't even have a digital frequency system like my 1975 Yaesu FT101B. The audio part is fairly simple using an isolating interface (HDARC Journal Oct 2017, or my website). Rig control can be achieved simply by using the rig's VOX mode and letting the audio from the computer operate the PTT switch. Bands will have to be manually changed on the rig and the driver and PA stages (and ATU) tuned up. Accurate timing can be done by selecting manual time on the PC and setting the seconds to within 0.25 sec, using the 'Time.is' website. The frequency must be set and maintained to 50Hz and that's going to be hard with a VFO dial that is often wrong by 2KHz and a drift rate of 1KHz an hour.

Get On The Right Track!

You could modify the rig to stabilize the VFO but I'd rather leave it original. So what's needed is an accurate frequency display so the VFO can be manually adjusted to keep things on track.

The FT101B has an octal socket on the back for an external VFO to be plugged in to allow split frequency operation. As well as a 12V DC supply, this also has a pin with an output signal from the internal VFO on it. So if the VFO freq is measured, one can calculate and display the operating frequency - time for a homebrew project I think!

Clever Chips - The simplest way to measure and display a frequency these days is to use a microcontroller and so I used the Arduino which I have some experience with. I started using a cheap Arduino Nano module as I thought that would be easier. A basic frequency counter was implemented by using the controller's internal counters to count clock cycles from the processor clock gated by the signal on an input pin. Interrupt routines then measure the count over a 1 second period and calculate the input frequency. An LCD display module can then display the result. There are loads of examples of this on the web. Well it worked but was not very accurate and drifted with temperature. This was due to the 16MHz ceramic resonator used for the processor clock which was awful. I had loads of 16MHz AT cut crystals so I used the basic ATMEG328P chip and built the circuit up myself on matrix board, which gave a much more stable result.

From Tiny Acorns… - The input pin on the micro needs a minimum 4 volts signal to work properly but the VFO output signal was only milli-volts. A lot of amplification of the 9MHz VFO signal was required. This proved to be quite difficult as the output is high impedance and the miniature coax I used couldn't be properly terminated as it killed the signal. A high impedance, source-follower front end was made, using a TIS69 (or 2N3819) J FET. An input capacitor stops any DC and a diode clamps any big signals from overloading the front end. The following 2 stages use common emitter amplifiers but I found I needed to use inductors in the collector loads to boost the HF gain as LF noise was messing up the output signal. Despite using the shortest length of coax possible I still get pick-up in the coax when on transmit. Having said that I now get a reasonable 4V square wave signal across the VFO range of 8.7 to 9.2MHz using the test point.

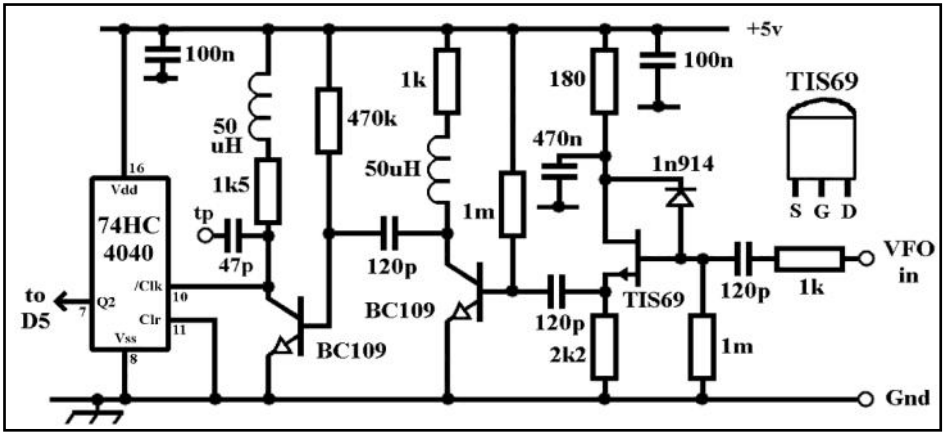

Nasty Maths

Measuring the VFO frequency is only the start of course. The FT101B uses a complicated set of frequency mixing to get to the operating frequency. A set of fixed crystals generate a heterodyne signal for each band, which is mixed with the VFO to work with the crystal filters for CW, LSB and USB, based on an IF frequency of 3180KHz. The audio bandwidth is 3KHz so for LSB the IF will be 1.5KHz higher and USB will be 1.5KHz lower. CW uses the USB filter but for an 800Hz side tone will be 700Hz lower. The formula is;
Freq = (Heterodyne - VFO) + IF freq (+/- 1.5KHz or -0.7 for CW)

80m band, hetero is 9520. LSB Freq = (9520 - VFO) + (IF+1.5)
So; (9520 - 9051.5) + 3181.5 = 3560KHz

20m band, hetero is 20020. USB Freq = (20020 - VFO) + (IF-1.5)
So; (20020 - 9161.5) + 3179.5 = 14037KHz

I've Got The Power

The great thing about using the power of a microcontroller is that the math's are easy. The hard bit is getting the data on the state of the rig into the system. I considered using a rotary encoder to input the data but that would have needed more interrupt handling. For selecting LSB, USB and CW, to make things simple I just used an analogue input and a pot and used 3 voltage levels.

The Ft101B band switch has 11 positions labeled A to K and I also wanted a position to show the raw VFO frequency. In the junk box had an old thumbwheel switch with 16 positions producing a 4 bit binary code, ideal for this, however another pot could be used as above.

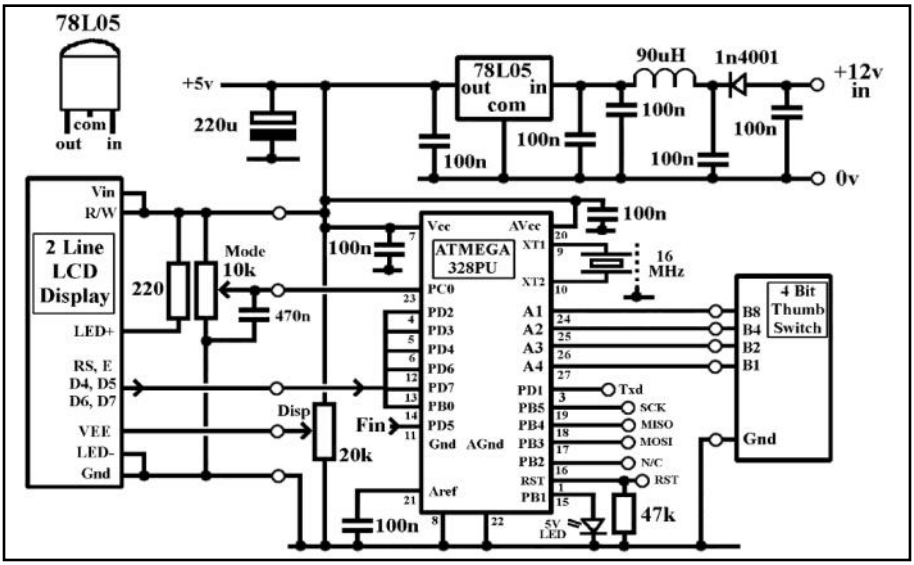

The rest of the circuit is straightforward with a simple linear regulator used to drop the 12V input to 5V for the circuitry. Connectors are provided to allow in-circuit programming of the microcontroller, a serial output for debugging and I fitted an LED to flash after each frequency measurement. A pot is provided to adjust the display contrast. The RF part is built on screened matrix board and the whole lot is jammed into a very small die-cast box.

Soft Play Area

The software is pretty simple with an offset provided to allow calibration of error in the 16MHz clock. The frequency measurement is stored and only displayed if the same as the previous value to remove rogue readings and the heterodyne frequency values and IF offsets programmed into the software and selected by the controls. The display shows the band switch position, band, mode and current calculated frequency. The frequency is truncated to 10Hz steps to stop annoying flickering of the display.

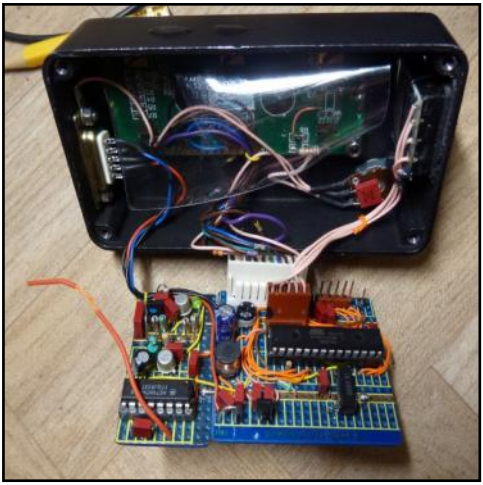

Results

The frequency display worked well and I can adjust the VFO to keep within 20Hz of the correct frequency and an awful lot easier than using a frequency counter and trying to work out the frequency. Successful operation of FT8 with stations across the world and various bands was achieved and the VFO drift is not a problem over the short time required to make an FT8 contact. It made FT8 a much more interesting mode to use with a real sense of achievement after a QSO exchange.

73/88 M0CAA and M0BOZ.

The story behind the callsigns
DQ100JL, DR100JL, DA0FFR, DB0FFR, DF0FFR, DK0FFR
by Stuart GØFYX

Special event stations DQ100JL, DR100JL, DA0FFR, DB0FFR, DF0FFR, and DK0FFR are on the air between 01.03.2021 00:00 UTC to 31.05.2021 23:59 UTC, so you still have plenty of time to go for the award, and the stations are quite active. Keep an eye on the DX Clusters (if you need any help with the cluster, please ask me. They are so useful).

On the occasion of the 100th anniversary of the ‚Junkers Aviation Transport Department, the DARC e.V. local associations H15 Hildesheim, S05 Dresden Nord, S44 Mittweida, W18 Dessau, W22 ZAB Dessau and Y43 Elbe-Elster together with the Flieger-Funk-Runde eV (FFR) will be issuing the award.

In 1921, the aviation pioneer Hugo Junkers' works included the departments of air traffic and aerial photography. They were the prerequisites for research, development and production of aircraft for control and civil use. Junkers Luftverkehrs AG, founded a little later in 1924, was the world's leading airline. By 1925, Junkers aircraft served 40% of the world air transport network. In the same year Junkers owned the Junkers Aviation School.

After a failed Russia management, the German Reich demanded the transfer of the shares of Junkers Luftverkehr AG against the settlement of debts. Junkers Luftverkehr AG merged with the airline Deutscher Aero Lloyd to form Deutsche Luft Hansa in January 1926.

At the beginning of the 1920's, the first small airlines began to establish regular air traffic. In order to be able to operate more economically, up to 16 companies from 9 countries joined together under the umbrella of Junkers Luftverkehr. After 5 years, the company was still dependent on state subsidies. For this reason, the merger of Junkers Luftverkehr with Deutscher Aero Lloyd was decreed in 1926. The name Luft Hansa was created for this new company at the opening ceremony in Dresden's town hall to mark the start of air traffic between Dresden and Munich.

The award can be acquired by all licensed radio amateurs and SWLs. To apply for the award, at least 5 QSOs must be made for the basic diploma. Each station can be rated once per band and operating mode (phone, CW, digital). There are contacts between March 1st, 2021 and May 31st, 2021 with the following stations:

DQ1ØØJL – special station operated by OV ZAB Dessau – W22
DR1ØØJL – special station operated by OV Dessau – W18
DAØFFR – Club station of the Flieger-Funk-Runde e.V. – S44
DBØFFR – Club station of the Flieger-Funk-Runde e.V. – Y04
DFØFFR – Club station of the Flieger-Funk-Runde e.V. – S05
DKØFFR – Club station of the Flieger-Funk-Runde e.V. – H15

The award is issued in 3 classes.

Economy Class – MIX Mode – 5 QSO's
Business Class – MIX Mode – 10 QSO's
First Class – MIX Mode – 20 QSO's

To promote the operating mode telegraphy, the diploma is also issued for QSOs in CW.

Economy Class – CW Mode – 5 QSO's
Business Class – CW Mode – 10 QSO's
First Class – CW Mode – 20 QSO's

The award is free of charge. It can only be requested online on the website https://www.100julu.de. You can then download it as a JPG file. The latest date for receipt of the application is December 31, 2021

Necromancing a Dead Mic - by M0CAA

A few weeks ago Chris M0KTT asked me to have a look at some communications microphones he had to see if any were suitable for his Kenwood rig. Amongst them were a couple of desk mics. One of which was a very nice Shure 444 which, after a bit of tidying and rewiring, is now working well for him. The other was a basket case that looked like it had spent 20 years on a supermarket PA system. To make matters worse it was 180 ohms so needed a matching transformer for a 600 ohm rig. Even with this, reports ranged from 'very muffled' to 'awful'.

Yet Another Project

It was destined for the bin but the casing was OK and I'm not one to throw anything useable away. Dismantling it showed the foam had crumbled away over the years and the insert, although reasonable quality, was in a bad way. Well I've often wondered about a desk mic and as there was still one remaining Sanyo electret insert in my junk box purchased from Maplin before their demise, a project was on.

We Can Rebuild Him, We Can Make Him Better

After dismantling the mic, the pop guard and outer shield were scrubbed in washing-up liquid till thoroughly clean and clear of debris. The insert was dismantled and the original voice coil assembly drilled out to fit the electret insert and its rubber sleeve inside.

Getting Toned Up

For a desk mic I wanted to be able to adjust the audio parameters for best results. Back in neolithic times, I built a 'stereo hifi system', gosh those were the days! This used an age-old active tone control circuit, where a collection of resistors and capacitors are placed in the feedback loop of an amplifier and dates back to valve amp days (just Google tone control circuit). A circuit was devised to use some rail to rail, 5 volt, quad operational amplifiers (LMV324) in my junk box. It was a surface mount part so I used a conversion PCB to enable use with 0.1" matrix board.

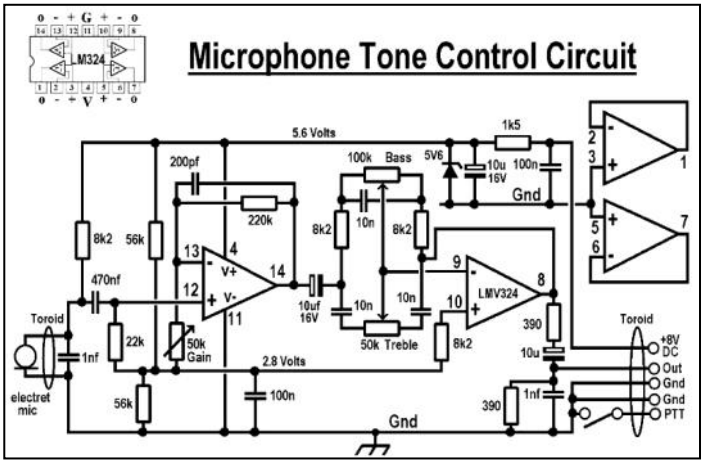

How It Works

The unit is powered from the 8V DC connection on the mic socket. To prevent interference this is stabilised using a zener diode at 5.6 volts. Power is supplied to the electret insert via an 8.2k resistor and RF pickup is removed by a 1000pf capacitor. I found it necessary to solder a 330pf capacitor directly across the back of the insert and loop the insert cable through a small toroid to make it work on 80m. The first stage amplifies the signal with some roll-off of the higher frequencies. It has variable gain (starting at x5) so the output level can be adjusted for your rig. A potential divider using 56k resistors sets the centre point at 2.8V to allow the audio signal to move up and down from this point.

The second stage has a gain of 1 and has two R/C networks around the feedback loop. The first is series capacitive, allowing the high frequencies to be boosted depending on the pot setting (Treble control). The second is parallel capacitive, boosting the lower frequencies depending on the pot setting (Bass control). The output is fed via a capacitor to remove the 2.8V bias and potted down by half by the two 390 ohm resistors to reduce the noise created by the amplification. All connection leads are looped twice through a ferrite toroid and the whole cable passed through a Ferrite sleeve, to provide RF isolation.

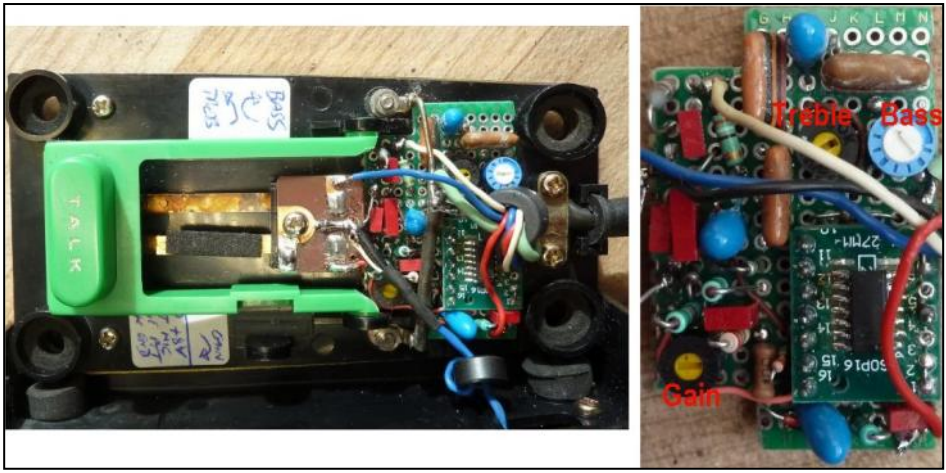

We're Jamming!

It was a challenge to jam it all in the case, the matrix board was cut to an interesting shape and lots of bits of the case cut off to get it in. To stop RF problems I had to fit solder tags to the metal base and run a loop of thick wire to provide a central grounding point. On top band there were several good reports, with an 'very good' from Howard, G3YZY, which is equivalent to a gold star I believe! On 80m I originally had problems with RF breakthrough but the 330pf cap and the toroid on the insert lead seem to have sorted that now. Overall the results are very good for a £1 microphone!

73/88 M0CAA and M0BOZ.

Shack Share Chris Heavens G4AMD/W7AMD
Hand Held Antenna testing……..Bigger is better…….mostly

I've collected a variety of "Rubber Duck" antennas over the years as well as made more than a handful of home brew ones too. If you've ever played with a handheld and compared the small whip it came with versus a "full size, or High Gain" aftermarket you've probably realized that bigger is better already. But how much better? Read on to find out. As I had time on my hands and some test equipment I decided that I'd make a little real world antenna range to run between my test bench and a mag mount with a BNC connector on the top of the roof of my car. My bench signal generator drove a test antenna in the middle of the 2m band, and the test antennas went out to the car so that I could quickly change the whips and make a note of the signal indication on my FT817 radio. I made the REFERENCE antenna my home made quarter wave piano wire antenna, setting the transmitted signal such that I had an S8 meter reading on the FT817. I then proceeded to change the whips on the Mag Mount BNC fitting without moving the mag mount or the coax feeding the radio inside the car, and noted the signal strengths received. It was interesting to see the effect of cars and kids on bikes passing by in the street thankfully only a few during my testing. I repeated the testing twice to make sure that I had solid repeatable numbers. Once completed I tested the VSWR presented to the radio, and brought the results into the shack to tabulate the results and calibrate the FT 817 S Meter. Now obviously this is no professional test range…and having in a previous work life built such a range I clearly knew the limitations of my tests, reflection paths and all, but I only wanted a relative comparison. Fortunately the results were actually what I expected within the limits of the measurement process used.

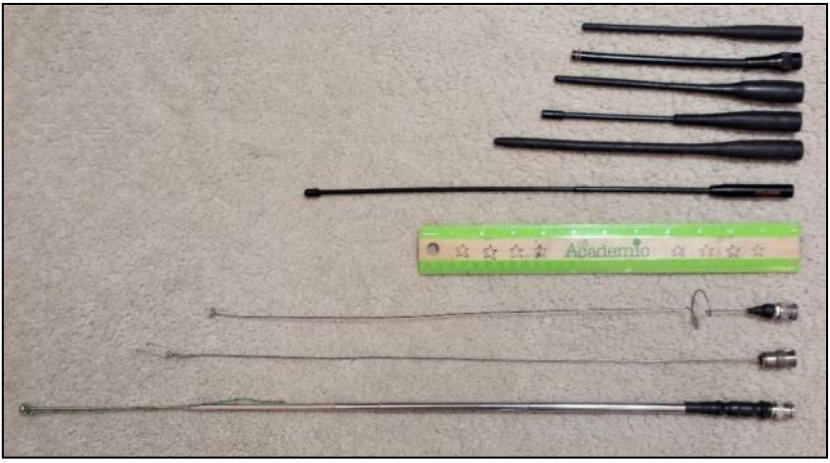

Tested antennas…The "Big Stick" is an End Fed Half Wave over 42 inches fully extended

Here are the test results that pretty much follow the “Bigger is better” line. If you do SOTA and want to get more contacts try one of these 42inch EFHWD whips. Be careful because just about all hand held radios have now gone to the SMA connector. Make sure the antenna screws fully down the thread and the shoulders of the antenna base rest on the radio case, if not it’s pretty certain that the long antenna will break the little connector if you apply any force to the whip. However, the reception is markedly improved over any of the “rubber ducks”. The smallest of these whips is on my new ID51 DStar radio, cute but even with 5W output I cannot access the PSRG repeater downtown Seattle from inside my home, but the aftermarket Diamond that is almost a full quarter wave long on 2m makes access easy!

Hand Held Antenna testing				
Antenna Type	Length inches	VSWR	RX signal "-dBm"	Signal Difference dB from REF
BigStick EFHWD	42	1.3	97	3
1/4wl whip	19.5	2.4	100	REFERENCE
2m/70cm whip homebrew	18.5	2.4	100	0
Diamond SRH77CA 2m/70cm	15.75	1.2	100	0
Yaesu FT 817 Dual Band	10	2.1	103	-3
Yaesu FT 530 Dual Band	8	4	104	-4
Yaesu FT51R Dual Band	8.875	4.7	107	-7
Misc brand VHF only	7.125	2.8	107	-7
ICOM ID51 dual band	6.85	1.8	108	-8

Note how many of these “factory whips” have a poor match. I only measured them mid band on 2m. Sharp eyes will see that I did in fact add a piece of my famous green wire (scrapped ground wire from my work days at Plessey Radio in Havant!) to the top of the Big Stick whip because as built the whip was too short and favored the top of the band. The broadband PA gain blocks in modern radios are fairly tolerant of VSWR and I don’t think any of the handy type radios have any fold back circuitry in them. My new ID51 cautions you to make sure an antenna is in place before transmitting to avoid damage to the radio, so they are not bullet proof! My FT817 has a fold back system and displays SWR and kills the output if it’s too high.

Are these VSWR unusual for wideband or multi-band antenna? My last work experiences with broadband tactical radio amplifiers clearly showed even worse matches existed with broad band antennas as we had to build amplifiers that could deal with much worse conditions than these numbers. Often their gain responses would be -15dBd at band edges. I worked with one antenna manufacturer who admitted using a 3dB resistive load to “improve the matching problem”, and another vendor had a finned heat sink at the bottom of their broadband antenna!! Antennas are interesting things for sure.

The RX signal is listed in negative dBm….so the smaller the number the stronger the signal. I’ve shown the relative differences in dB on the last column comparing each of them to the REFERENCE quarter wave whip. So the difference from the little ID51 rubber Ducky to the Big Stick EFHWD is like turning on an outboard amplifier…the difference is a **HUGE 11dB** but it’s very hard to put it in your pocket when you walk the dog; I know because I’ve tried!!

Simple Coax Checking Jig

I started checking some equipment prior to an event, so as to avoid any problems on set-up. But I have found to my cost, that what ever one does in preparation there's always a "Cock up" of some kind! One can only try!

One of the tasks was to check the coax cables for condition and impedance. Condition was a straightforward task, visually inspecting them for damage and testing with a Megger for insulation resistance. But how could I check impedance? I was looking for a quick and simple technique. Over the years I have noticed that 50 ohm coax has a nominal capacitance of 30pF per foot and 75 ohm coax a nominal capacitance of 20pF per foot. Could I use these values of capacitance to good effect? I decided to try, so I dusted off my home brew capacitance bridge. The accuracy was a bit suspect but by checking its calibration against 30pF and 20pF fixed capacitors, accuracy should not be a problem. So now to check the coaxes.

There were two lengths of coax marked as 75 ohm. For the first one I cut off 13 inches, (apologies for using imperial as opposed to metric but because of my age, imperial is easier to use) then stripped off 1 inch and prepared the ends so that it could be connected to the bridge; the bridge balanced at 20pF . Good, this was almost certainly 75 ohm coax. Now the second piece was similarly prepared, but now the bridge balanced at 30pF, oh dear! This was almost certainly 50 ohm but was marked incorrectly! I checked all the other cables using the same method, and the bridge balanced

constantly at 30pF, which if my method of checking was ok, meant they were all 50 ohm cables. I felt fairly confident that they were, because of the consistency of results.

I felt, at the time, a small article in the club journal suggesting this method might be of use to other members, and also provide me with feedback as to its validity. But decided against doing so because there might not be many who have a capacitance bridge. The thought occurred to me that using the ubiquitous Grid Dip Oscillator (every Ham shack should have one) capacitance of coax cables could be measured. But then apathy set in, and it was forgotten until now. Why now?

Having suffered a painful injury I needed something to occupy my mind that was not too physical, the result is the jig coupled to the GDO that you see at the beginning of this article.

The jig is very simple, nothing more than about 18 turns of wire wound on a piece of 35 mm plastic overflow pipe about 4.5 inches long mounted on a piece of fibre glass board (all copper removed) with two push type connectors mounted alongside and connected to the coil ends. The only critical bit was to make sure the GDO was not too heavily loaded, just a small dip is all that is required; that's the reason for the fairly long pipe and adjusting the number of turns so that only one coil is required.

To calibrate, connect a 30pF capacitor to the jig, check for the dip at resonance and note the frequency (mine is 6.5 MHz). This is the 50 ohm check point. Remove the 30pF capacitor and now connect a 20pF capacitor; again note the dip frequency (mine is 7.7MHz); this is the 75 ohm check point. The frequency is not critical, just make sure that only one coil is used otherwise it becomes annoying to have to change coils to find the dip point for different coaxes.

I think I should point out that I haven't any previous knowledge of this method of checking the characteristic impedance of coax, so it may well be flawed. If anyone can see a problem please let (the editor) know.

I tested seven different 50 ohm cables from RG213 to miniature types, and the frequency spread was from 6.3 to 6.63MHz bearing in mind that 30pF is only a nominal figure. For 75 ohm cables the spread was greater from 7.6 to 8.4MHz. I can only hazard a guess at the reason for this; the coax was TV receiver type and not for use on a transmitter, and therefore the specification was not as tight.

Now get checking those odds and ends of coax that have been lying around for a long time and let us know what you think.

(This article appeared in a previous edition of the journal)
Good testing, 73 de Ken G4BQV.

It's a Kiss

A Club member very generously allowed me to use his Antenna Analyser while cutting and checking for resonance at 50Ω impedance on some dipoles .

I found the analyser extremely useful and I would like to own a similar piece of test equipment, unfortunately it is an expensive item to purchase: so other methods had to be found

My idea was to develop a simple 50Ω bridge driven by a low power oscillator covering the range 1Mhz to 35Mhz.: this should give me the characteristics I wanted. I was after a simple circuit, but it should do what I wanted, or more correctly I hoped it would do what I wanted.

The oscillator was fairly easy to develop but the bridge circuit was a different matter. I could not obtain sufficient sensitivity and after wasting a considerable amount of time, the bridge circuit was abandoned and I went in search of inspiration.

The inspiration came from Clive Smiths G4FZH 'TEST EQUIPMENT FOR THE RADIO AMATEUR' in chapter 7.9 'An RF impedance bridge': where a simple RF impedance bridge is described, using a grid dip oscillator as the driving force. Initially I couldn't understand how it worked: but being a simple circuit and I had the necessary Grid Dipper I decided to construct a lash up. Once I got it working its operation became obvious and I could modify to my requirements, that is: The Bridge will balance at an impedance of 50 ohms only.

The mods to the original circuit are shown above, C1 & C2 capacitors are changed to 82pf fixed ceramic plate, 100R resistor changed to 50R and a 200uA meter was used because it was available and of edge wise construction and fitted in with my intention of mounting both the 25 mm x 25 mm circuit board and meter in the Dipper box. The diode across the meter protects it from overdrive.

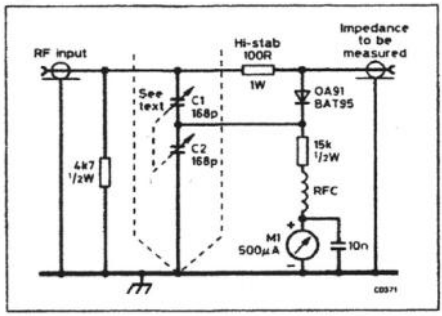

Simple RF bridge

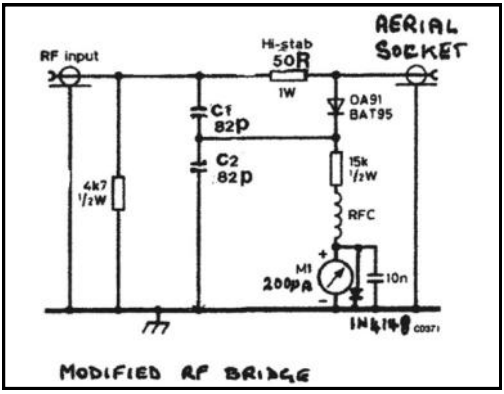

The drive is obtained by link coupling to the Dipper: a separate link is used to drive a frequency counter because the calibration becomes inaccurate at heavy coupling. (Keep It Simple Stupid!).

To use: cut the aerial slightly longer than the calculated figure, set the Grid Dip oscillator to the required frequency, adjust the drive for full-scale deflection on the meter by adjustment of the link coupling, connect the coax to the aerial socket and reduce frequency to obtain zero deflection this will prove that the aerial is in fact too long now trim the aerial for a zero deflection at the required frequency.

That's it, can't be simpler can it? All the HF aerials I've constructed using this simple set-up have loaded the Rig with a 1:1 VSWR at the test frequency.

I think I should mention that all the test dipoles were fed via a 1:1 balun at the centre feed point: this effectively isolates the coax from the aerial.

If a frequency counter is not available, use as light a coupling as possible to the Grid Dip oscillator.

Two photographs of the set up follow. The circuit board can be seen below and to the back of 200uA meter. The link couplings are wound on a piece of plastic tube set in the wall of the box, this allows for easy adjustment of drive by sliding the Grid Dip Oscillator coils into this tube.

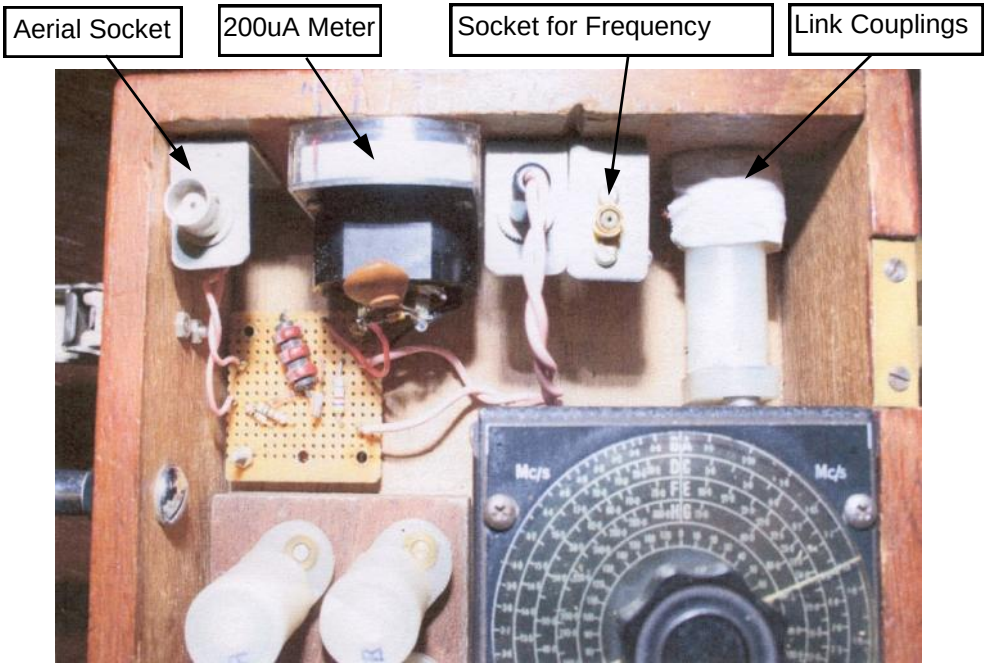

The complete set-up: Grid Dip Oscillator with coils and Aerial bridge located at top left hand corner.

Submitted by Ken G4BQV. (Article appeared in a previous journal).

Horndean & District A.R.C Information.

Club Call signs ***G4FBS (Held by MØKTT); G6RST (Held by G4WQZ)***

Club Website **http://www.hdarc.co.uk**
(Maintained by Neil 2E0LNX)

Club Groups.io site *Administrator is Stuart GØFYX*

Club Facebook Page *https://www.facebook.com/hdarc1975/*

Club Twitter Account *@HorndeanARC*

Club Meetings *Held at Deverell Hall, 84 London Rd, Purbrook, Waterlooville, Hants. PO7 5JU, on the 1st and 3rd Friday of each month. Commencing at 1900.*

Club Nets ***All times are local and frequencies plus/minus QRM.***

Sunday *0900 CW until about 0930 then SSB on 1950 kHz.*
Net controller:- Stuart GØFYX

2000 FM 433.450 MHz
Net controller:- John G4WQZ

Monday *1930 SSB 1950kHz*
Net controller:- Stuart GØFYX

Wednesday & Friday
1930 FM 145.375 MHz
Net controller:- John G4WQZ

Club Membership

Joining fee £2 . Annual fee £26. Those aged 10-18 pay half this rate, and under 10's have free junior membership. For Europe and rest of the World fees please contact the Membership Secretary. All annual fees payable on November 1st. If fees not paid by the following January 31st, membership is ended.

News of club members

A reminder about the HDARC 2m nets, now Wednesday and Friday on 145.375 MHz at 1930 local time. An ideal chance to keep in touch with other club members. Please give it a go, and all are welcome. Just call in.

Diary

Tuesday April 13th Club Zoom meeting at 2000.
Tuesday April 20th Club Zoom meeting at 2000.
then April 27th, May 4th, 11th, 18th, 25th, June 1st, June 8th etc.
The link for all the club zoom meetings is:
https://us04web.zoom.us/j/77825040776pwd=eHpreHVCVkVRMWs5RG9SaTFtMTF5UT09

Meeting ID: 77825040776
Passcode: dU2Px2
But you shouldn't need either of these if you click on the link above.

This 'n' that

The RSGB series of Club Championship contests continues. Dates are
April 12th CW
April 21st SSB
April 29th Data (PSK63/RTTY)
May 10th SSB
May 19th Data (PSK63/RTTY)
May 27th CW
June 7th Data (PSK63/RTTY)
In addition there is a FT4 contest on April 7th and May 5th.
All contests are on 80m from 2000-2130 local time.
For the rules and details see:
https://www.rsgbcc.org/hf/rules/2021/r80mcc.shtml

There is a new series of 6 RSGB videos, primarily for new licensees, but look useful for anyone . Titles are:
Slim Jim antenna
Simple balun
Soldering a PL259 to a cable
Tuning a dipole with NanoVNA
Audio interface
CAT control
See https://rsgb.org/main/activity/useful-practical-skills-for-new-licensees/

Here's our 6m and 4m selection

DUAL PA-5070-11-6BG
6m 5 element + 4m 6 element

- Gain:..... 6m - 10.6dBi, 4m - 12.1dBi
- F/B:.....6m - >22dB, 4m - >26dB
- Boom: 5.4m
- Weight:.....10.5kg

£299.95

Innov DB664
Dual Band 4/6m 3 element Yagl

Compact beam on a 1.175m boom, gives great performance where space is limited.

- Gain:..... 6m - 6.83 dBi
  4m - 7.05 dBi
- F/B:.....6m - 10.12 dB
  4m - 18.3dB
- Boom:.....1.175m

£149.95

50MHz Antennas

Innov Antennas
LFA-8..... 8 el. LFA2..13.57 dBi.....£599.95
LFA-7..... 7 el. LFA2-HD..12.8 dBi.....£385.95
LFA-7..... 7 el. G3WOS 12.9 dBi.....£399.95
LFA-6..... 6 el. LFA3 11.9 dBi F/B 30.21dB.. £309.95
LFA-6..... 6 el. LFA2 11.22dbi F.B 32.21dB.£269.95
LFA-6..... 6 el. LFA2 11.22dbi F/B 38.21dB £290.95
LFA-5..... 5 el. LFA3 ..10.7dBi F/B 31.79db £219.95
LFA-4..... 4 el. LFA 9.4dBi F/B 31.87 dB...£189.95

Cushcraft
A50-6S..... 6 el. rugged 11.6 dBi.....£359.95

Dual
PA-50-4-3B..... 4 el. 9.2 dBi 2.92m boom.....£159.95
PA-50-6-6BG.....6 el. 11.5dBi 5.84m Boom.....£245.00
PA-50-6-6BGP.....6 el. 11.5dBi High Power.....£299.95
PA-50-7-9BGP.....7 el. 12.7 dBi 8.68m boom.....£359.95

Sirio
SY50-5.....5 element.....10.5 dBi..... £129.95
SY50-3.....3 element.....8.5dBi.....£99.95
Tornado.....50-60 Vertical...3.5 dBi..... £59.95

Comet
CA-52HB4..... 4 el. Portable. 10.4 dBi..... £129.95
CA-52HB2..... 2 el. Portable..6.3 dBi.....£89.95

Diamond
A502HBR2..... 2 el. Portable..6.3 dBi.....£89.95

70MHz Antennas

Innov Antennas
LFA-70-6.....6 element LFA..11.83 dBi..... £189.95
LFA-70-4.....4 element LFA ...9.8 dBi..... £149.95
LFA-Q.....2 element Quad ...6.8 dBi..... £114.95

Dual
PA70-5-3..... 5 element 10.3 dBi.....£199.95
PA70-6-4..... 6 element 11.7 dBi.....£219.95

Sirio
SY-68-3..... 3 element 7 dBi.....£79.95
CX-4-68..... Vertical 4.15dBi.....£69.95

Dual Band 6/4 metre

Dual
PA5070-7-3.....6m 3 element….4m 3 element...£229.95
PA5070-11-6BG.....6m 5 element….4m 6 element ..£299.95
PA5070-13-7BG.....6m 6 element….4m 7 element ..£369.95

Innov Antennas
DB664.....6-3 el..6.83dBi..4-3el 7.05dBi.....£149.95

Innov Antennas - Current Baluns

70cm Balun..... 700W.....£24.95
2m Balun..... 1kW.....£29.95
4m Balun..... 1.5kW.....£33.95
6m Balun..... 1kW.....£39.95
HF+6m Balun..... 2.4kW.....£49.95
2/70cm Micro Balun..... £24.95

MUCH MORE on our WEBSITE 24/7 Showroom Opening Hours: Monday - Friday 9AM - 5:30PM Closed Saturday

www.nevadaradio.co.uk 023 9231 3090

• Unit 1 • Fitzherbert Spur • Farlington • Portsmouth • Hampshire • PO6 1TT